W W W R G B A
warm neutral cool

Studio Due®
emotion and creativity in light

THEATRE600 plus

DMX-RDM monochromatic
2700K CRI90 flicker free

New compact LED diffuser with warm white CRI90 LEDs.
Dimmable DMX-RDM version.
Complete with gelatin holder frame.

TECHNICAL FEATURES

www.studiodue.com

ITEM	FIXTURE	THEATRE 600 PLUS RDM
Light source	Monochromatic	n.19 warm white LEDs 2700K 90CRI On request: neutral or cool white, red, green, blue, amber LEDs
Color temperature		2700K
Power on LEDs		75W
Lumen		6000lm
CRI		>90
Optics		110°
Total power absorbed		80W
Voltage range		Universal 180-277Vac
Frequency range		47-63Hz
Power factor		>0.90
Inrush current		60A
Working temperature		-30° +45°
Physical (WxDxH)		255x225x175 mm
Weight		3,3 Kg
Control		Standard interface: RS-485/RDM, optocoupled input Protocol: USITT DMX512
Connections		Signal: IN/OUT XLR 5pin (on request 3pin) connector (male-female); possibility to link up to 32 devices in chain. Main Power: IN/OUT POWERCON 3pin connector (male-female) possibility to link up to 8 devices @230V or 4 devices @120V in chain.
Setup		DMX or Auto mode with Master-Slave function Intelligent temperature control Flicker-free function Smooth dimming function Halogen simulation RDM Control/Configuration or individually by DRS (remote control device)
DMX channels		3CH mode, 1CH mode
Strobe effect		0.5-25 Hz

© Copyright Studio Due light srl - Specifications are subject to change without notice. Trademarks are the property of Studio Due Light Srl
Strada Poggino, 100 - 01100 Viterbo (Italy) - tel. +39.0761.352520 (4 lines) - fax +39.0761.352653 - C.F. e P. IVA 05793121004

Studio Due®
emotion and creativity in light

PHYSICAL

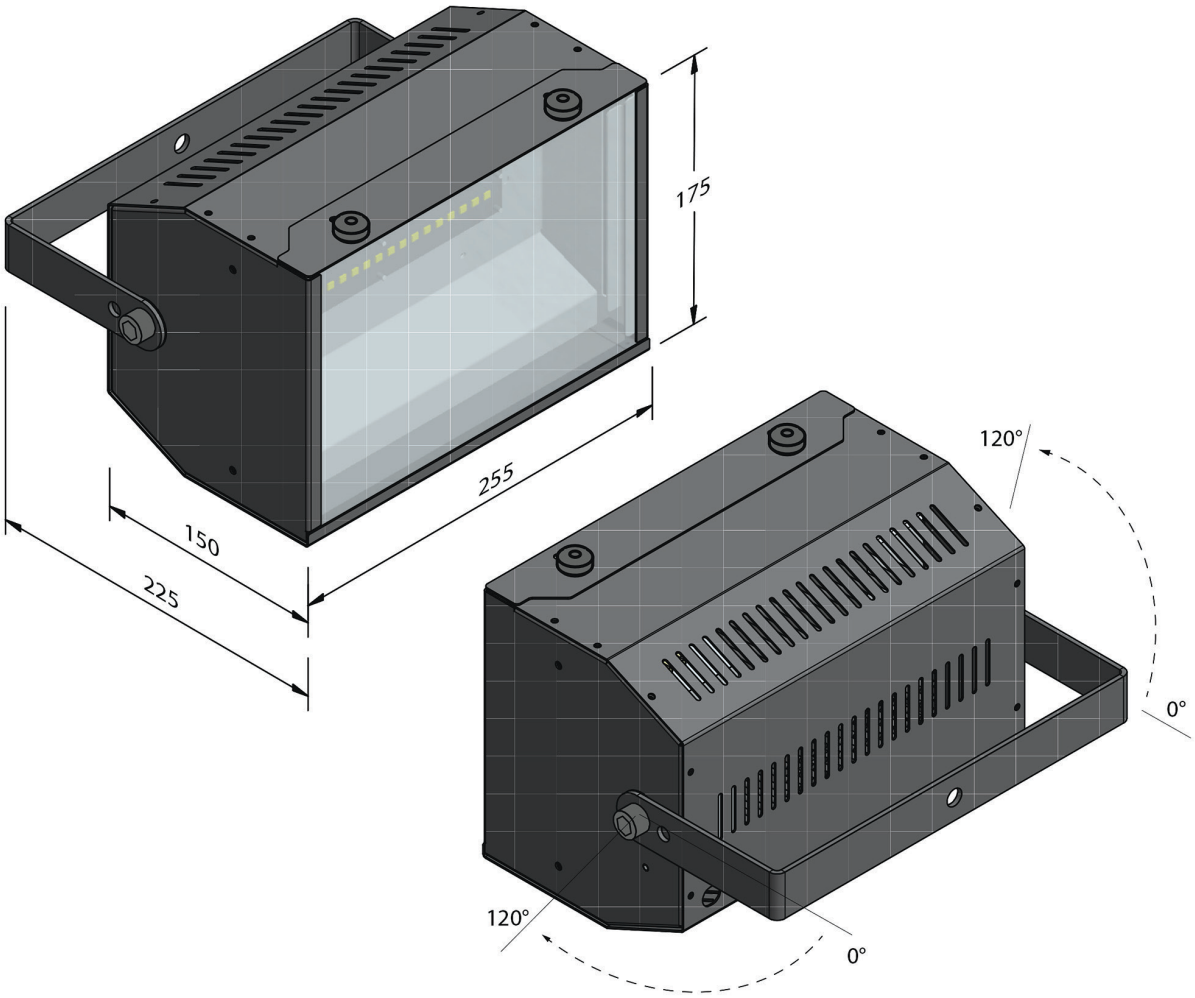

© Copyright Studio Due light srl - Specifications are subject to change without notice. Trademarks are the property of Studio Due Light Srl
Strada Poggino, 100 - 01100 Viterbo (Italy) - tel. +39.0761.352520 (4 lines) - fax +39.0761.352653 - C.F. e P. IVA 05793121004

Studio Due®
emotion and creativity in light

PHOTOMETRICS

www.studiodue.com

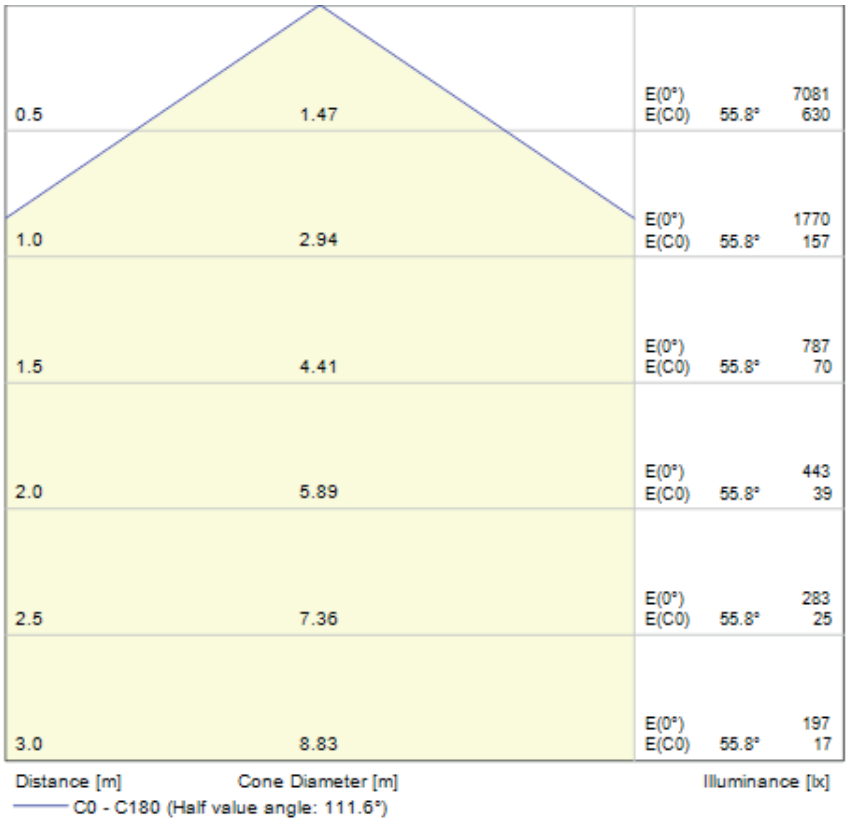

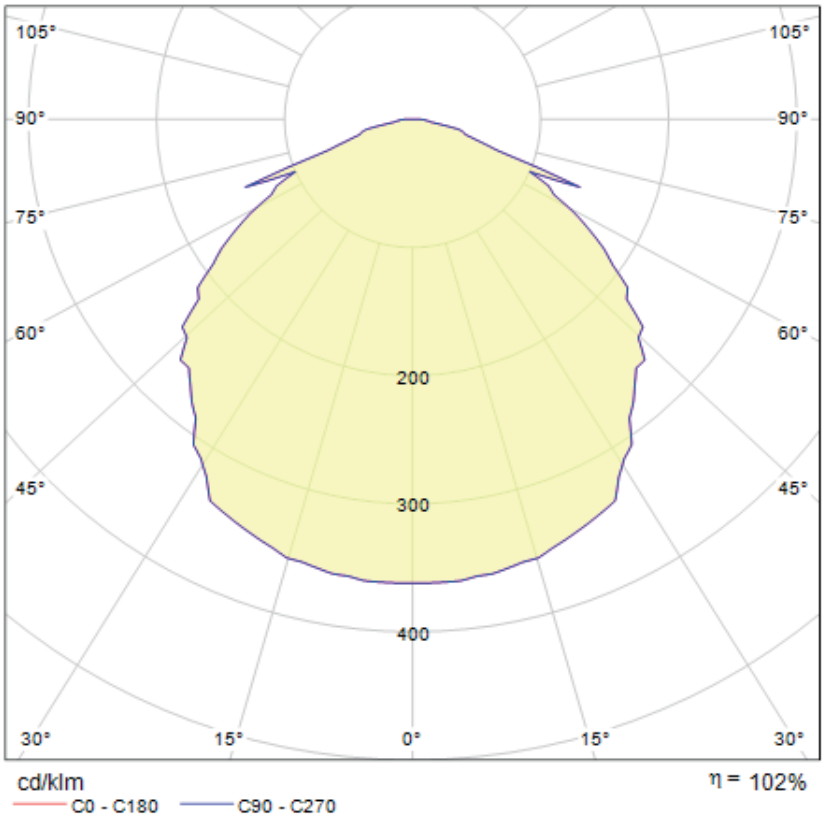

© Copyright Studio Due light srl - Specifications are subject to change without notice. Trademarks are the property of Studio Due Light Srl
Strada Poggino, 100 - 01100 Viterbo (Italy) - tel. +39.0761.352520 (4 lines) - fax +39.0761.352653 - C.F. e P. IVA 05793121004